NP MOUNTS

DESCRIPTION

The AMC-MECANOCAUCHO® NP mounts are composed of a metallic flange and a bush that are bondend to a high resilient rubber compound.
The AMC-MECANOCAUCHO® NP mounts can be fitted with overload/rebound washers. This allows fail-safe installations. For this purpose we recommend using washer Ref. AMC: 608074 that has the following dimensions :76x16.5x5mm.
The flange comes with four fixing holes and the inner bush allows upto 120 N/mm tightening torque.

TECHNICAL CHARACTERISTICS

AMC-MECANOCAUCHO® NP mounts can be applied in mobile applications when installed with overload/rebound washers.
AMC-MECANOCAUCHO® NP mounts are available in several rubber hardnesses to suit the p g g q load range of the application.

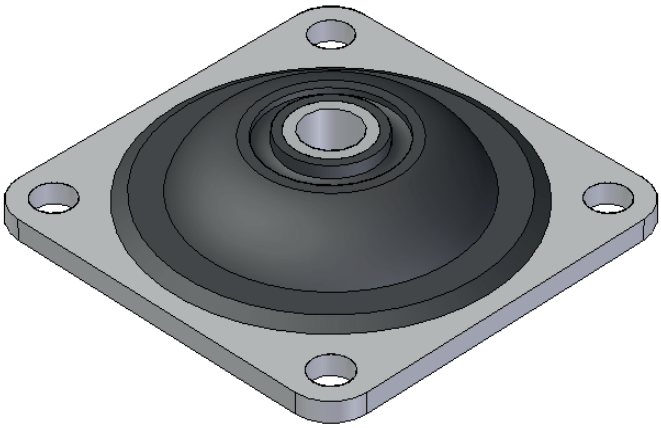

APPLICATIONS

AMC-MECANOCAUCHO® NP mounts are used for the effective noise and vibration isolation in the following applications:
•Agricultural equipment
•Construction equipment machinery.
•Cranes.
•Forklift trucks.
•Multipurpose vehicles.

	Max. Load (Kg)	CODE
50 Sh	250	138202
70 Sh	400	138203

* In order to adapt its products to the state of the art, AMC .A. reserves the right to modify the conception and manufacture of the materials presented in this catalogue without prior notice

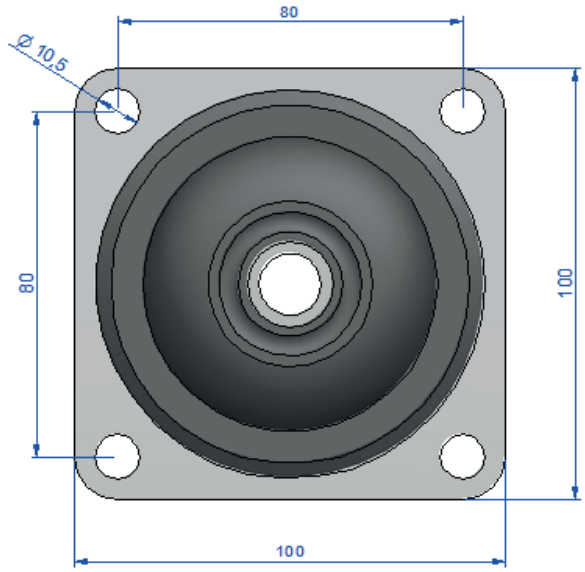

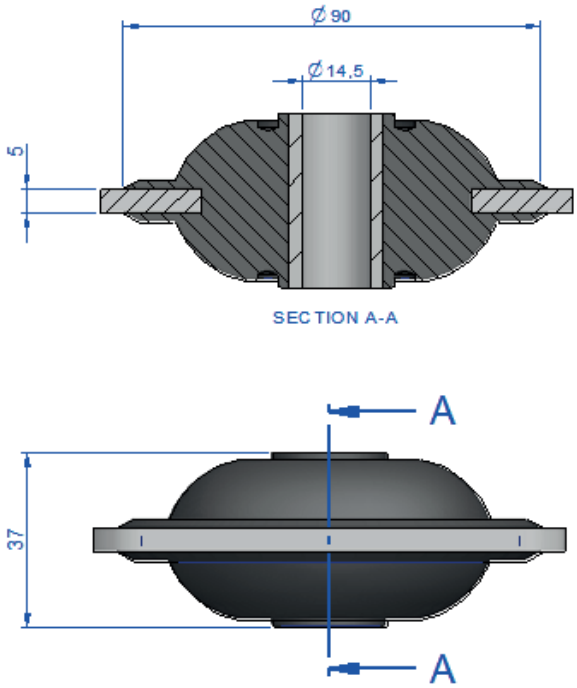

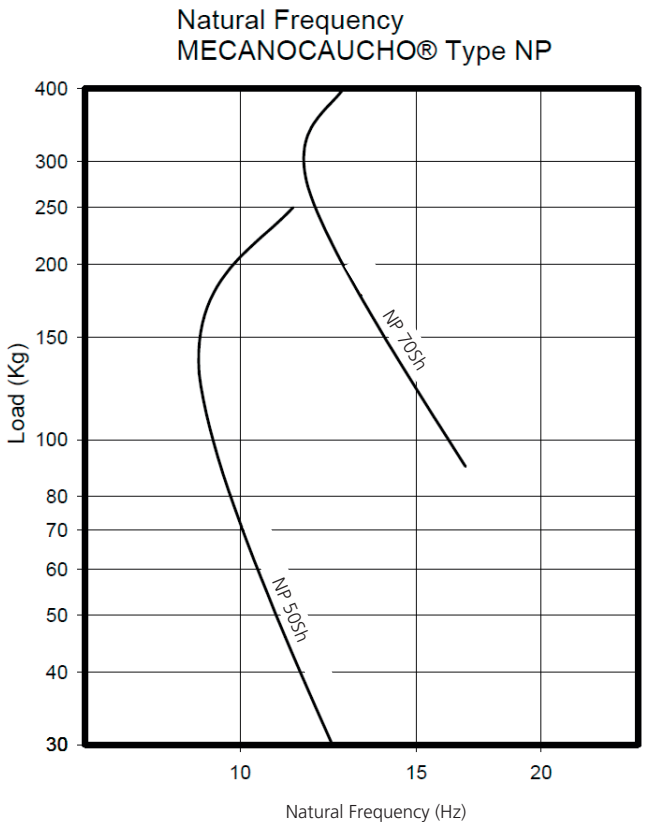

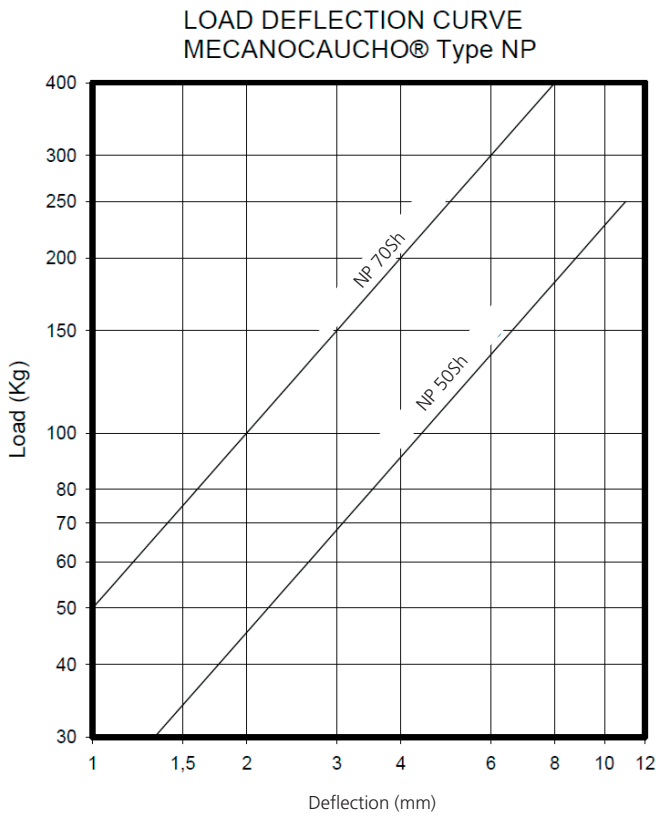

* In order to adapt its products to the state of the art, AMC .A. reserves the right to modify the conception and manufacture of the materials presented in this catalogue without prior notice